Dynamometer for M320 Grenade Launcher

University of Colorado Boulder

Sponsors: Chris Miller and Joe Reynolds

Test Systems Engineer / CAD Director: Monty Carlo

Project Engineer / Finance Manager: Tanner Mast

Manufacturing Engineer Lead / CAD Director: Courtney Powell

CAPCO

BACKGROUND

The M320 grenade launcher, which can be seen in Figure 1, generates a large recoil force when fired.

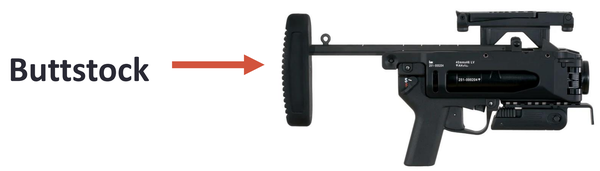

Figure 1. M320 Grenade Launcher

Capco desires a mechanism to quantify the recoil energy of the M320 Grenade Launcher to aid in the development of buttstock prototypes that reduce recoil (Figure 2).

(a) (b) (c)

Figure 2. Current Buttstock (a) Improved Buttstock Designs (b) and (c)

PROJECT OBJECTIVE

Fabricate a dynamometer that quantifies recoil energy of the M320 grenade launcher. Device will measure force and displacement as function of time.

DESIGN REQUIREMENTS

- Measure up to 3 in of displacement
- Measure a compressive force of 2,500 lb_f
- Testing unit must be mobile
- Measure displacement as a function of time
- Measure force as a function of time
- Minimum sampling frequency of 10,000 Hz
- Stay within $5,000 budget

DESIGN

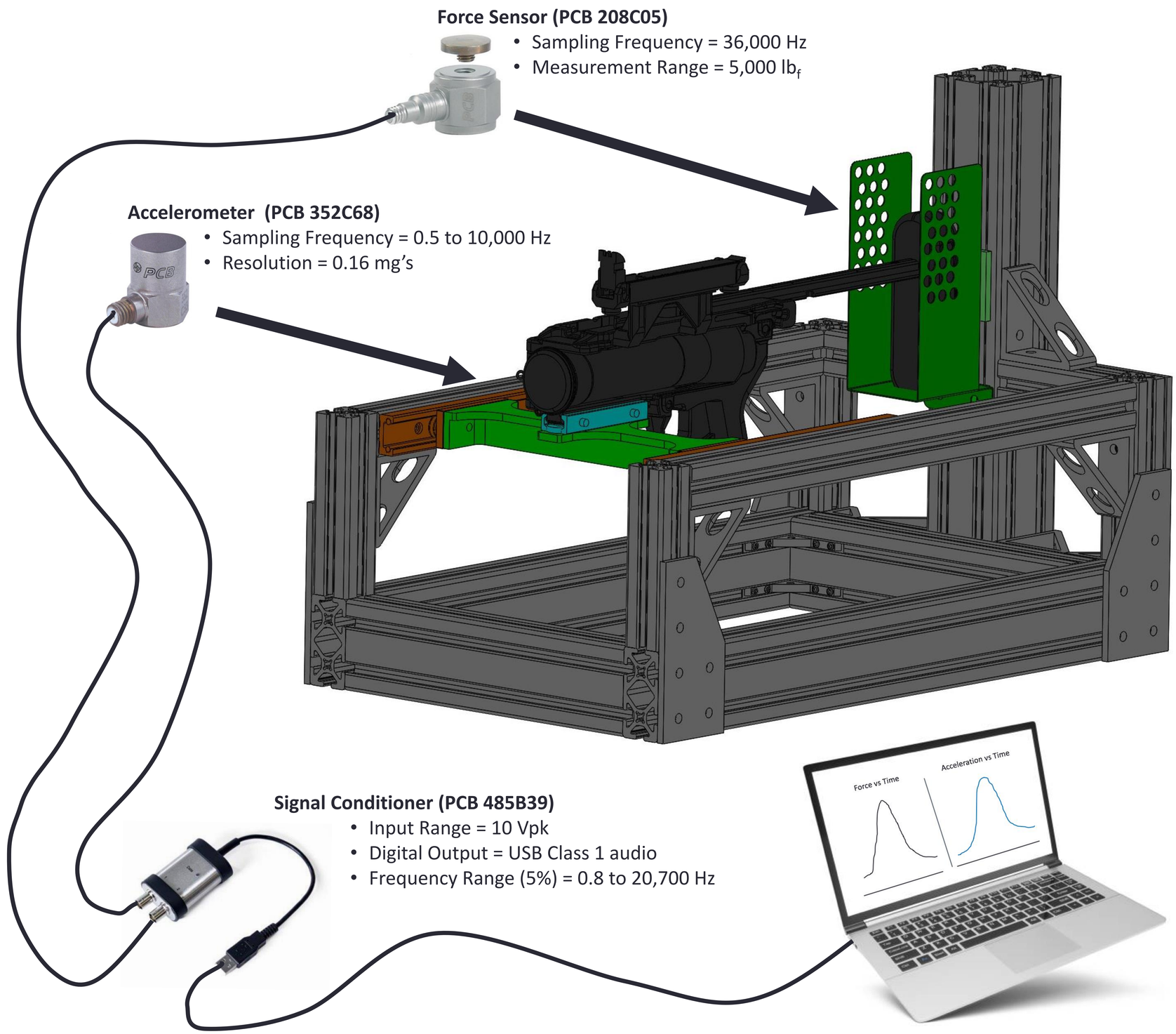

Dynamometer for M320 Grenade Launcher

University of Colorado Boulder

Sponsors: Chris Miller and Joe Reynolds

Team: Monty Carlo, Tanner Mast, and Courtney Powell

CAPCO

DESIGN EVALUATION

1. Set up Dynamometer and secure it to table with C-clamps
2. Measure total displacement allowed by the roller rails and carriages
3. Mount M320 onto Dynamometer with the picatinny rail
4. Tie string to trigger
5. Secure buttstock in the butt support using zipties
6. Adjust butt support so that M320 is level in the stand
7. Load the 40 mm round into the weapon
8. Step away from stand and weapon so that string is tight
9. Start recording LabVIEW VI
10. Pull the string to fire the weapon
11. Stop LabView
12. Analyze data and compare to calculated values

Dynamometer for M320 Grenade Launcher

University of Colorado Boulder

Sponsors: Chris Miller and Joe Reynolds

Team: Monty Carlo, Tanner Mast, and Courtney Powell

CAPCO

RESULTS AND CONCLUSION

- The dynamometer allowed the three buttstocks to be adequately tested
- The PCB rails and carriages allowed for 8 inches of displacement
- One person can carry the assembled stand
- Measures displacement and force as a function of time
  - Will need further calibration and sensitivity testing
- Spent $2,370 of the $5,000 budget
- The final design is robust and built for handling the high recoil from the M320 weapon system

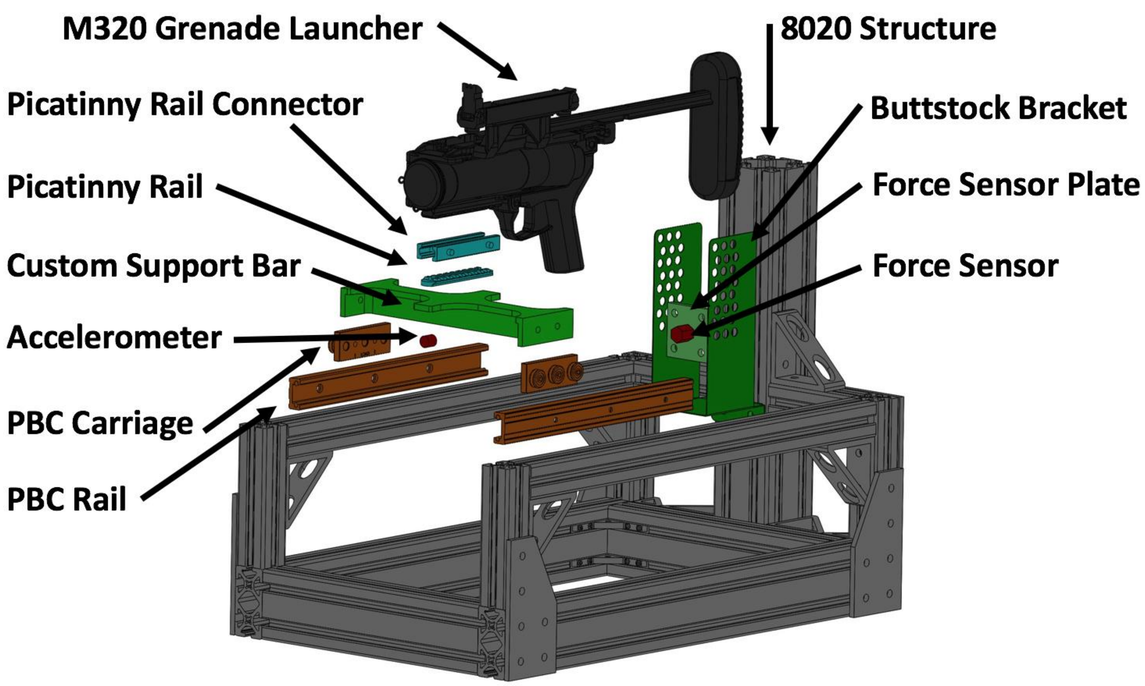

Exploded View of Dynamometer

Finished Dynamometer